ISOMAG

The friendly magmeter

DATA SHEET

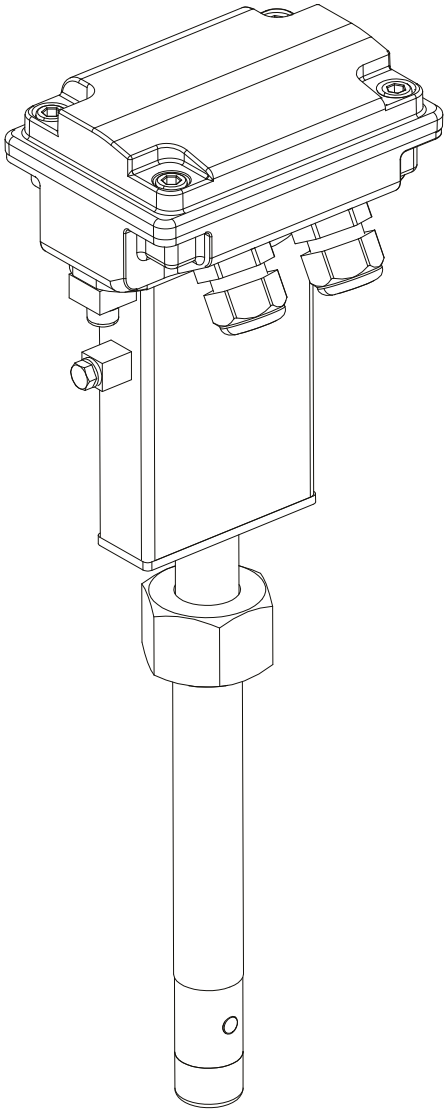

MS 3780

CE

ISOIL INDUSTRIA

INDEX

OVERALL FEATURES 2

STANDARD FEATURES 2

OPTIONAL FEATURES 2

TECHNICAL DATA 2

OVERALL DIMENSIONS 3

LAYOUT 4

INSTALLATION 5

INSTALLATION RECOMMENDATIONS 6

SENSOR GROUNDING 7

SENSOR VERSIONS / JUNCTIONS BOX 8

SEPARATE VERSION 9

ACCURACY TABLE 10

HOW TO ORDER 11

The manufacturer guarantees only English text available on our web site www.isoil.com

TECHNICAL DATA

OVERALL FEATURES	
Size for pipe line Ø	❑ Size 1 Ø ≤ 500mm ❑ Size 2 Ø ≤ 1000mm ❑ Size 3 Ø ≤ 2000mm
Minimum conductivity	❑ 5 µS/cm
Humidity Range	❑ 0÷100% (IP 67)
Accuracy	❑ See relevant converter data sheet
CE Certification	❑ Yes

STANDARD FEATURES	
Body material	❑ Stainless steel AISI316
Nominal pressure	❑ 1600 kPa
Process connection	❑ 1"Threaded end
Version – protection rating	❑ Compact IP67
Lining material/gasket	❑ PEEK/FPM
Liquid temperature	❑ -20°C° ÷ 100°C compact version ❑ -20°C° ÷ 130°C separate version
Electrodes material	❑ Hastelloy C276

OPTIONAL FEATURES *(CHECK FOR MORE DETAILS 'HOW TO ORDER' ON LAST PAGE)*	
Size for pipe line Ø	❑ Other on request
Nominal pressure	❑ Others on request
Process connection	❑ Others on request
Electrodes material	❑ Others on request
Version – protection rating	❑ Separate version (max 20m) – IP 68 ❑ Separate version (max 500 m), with preamplifier – IP 67 (OPT. IP 68)

The manufacturer guarantees only English text available on our web site www.isoil.com

OVERALL DIMENSIONS

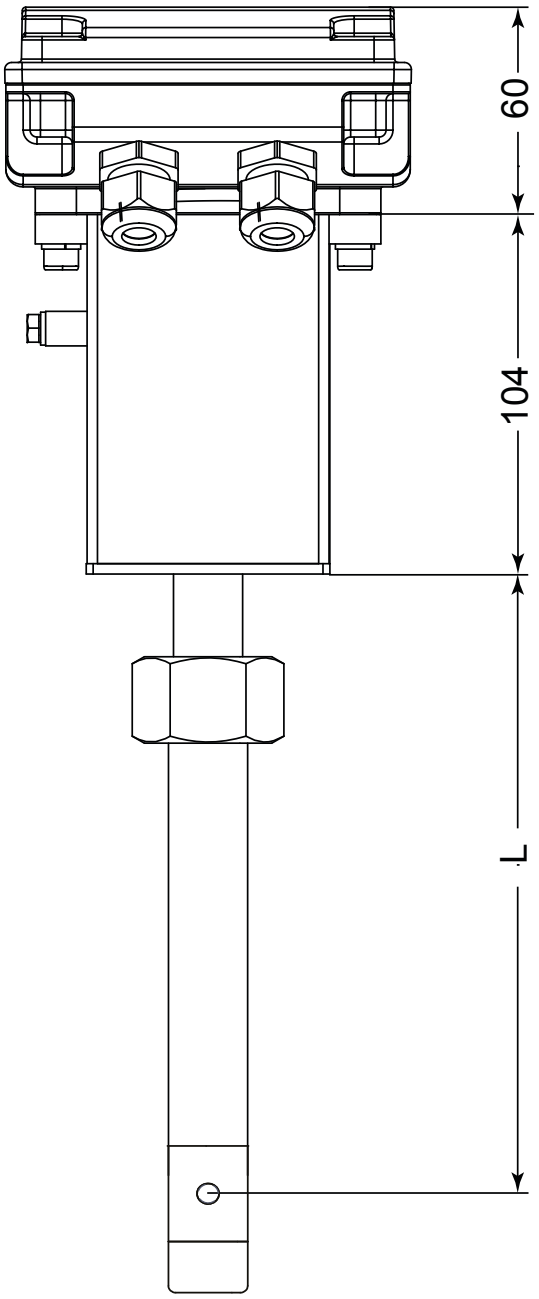

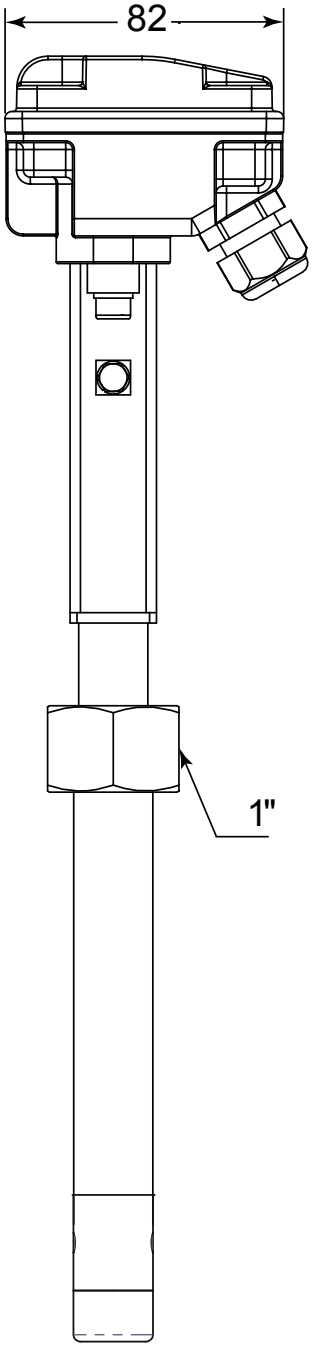

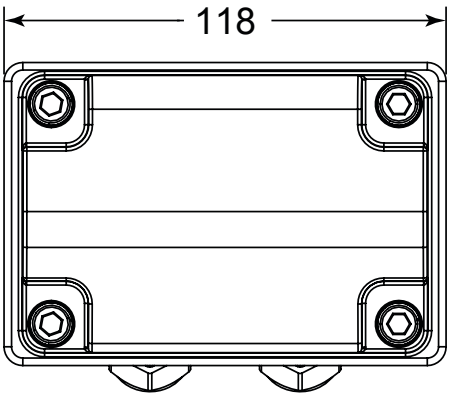

The manufacturer guarantees only English text available on our web site www.isoil.com

LAYOUT

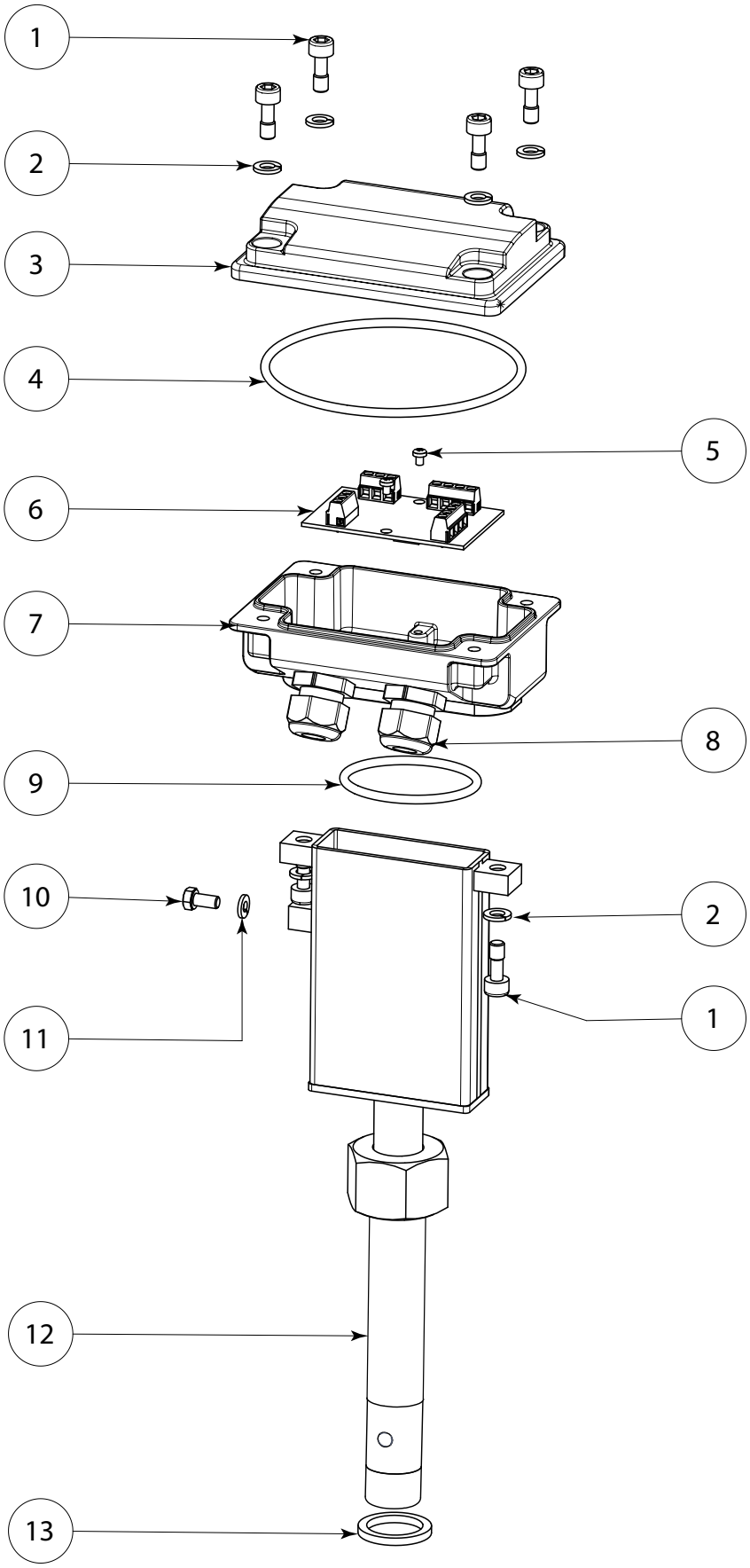

POS.	DESCRIPTION
1	SCREW M6x16
2	GROWER Ø6
3	JUCTION BOX COVER
4	O-RING 4400
5	SCREW M4x6
6	PCB FOR SEPARATE VERSION (NORMAL OR PREAMPLIFIER)
7	JUCTION BOX MAIN HOUSING
8	CABLEGLANDE PG9
9	O-RING 155
10	SCREW M5x10
11	GROWER Ø5
12	SENSOR MS3770
13	GASKET PTFE

The manufacturer guarantees only English text available on our web site www.isoil.com

INSTALLATION

- **Cut the Ø 1" jacket as in picture 1 (dimensions in pic. 6)**
- **ATTENTION: consider the necessary over-metal for the welding operation (pic. 2)**

Z=L-S-1/8D-32

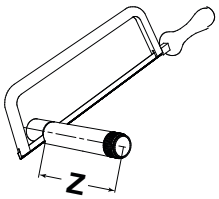

Pic. 1

- **weld the jacket to the pipe line**

Recommended operative dimensions for 1" screw

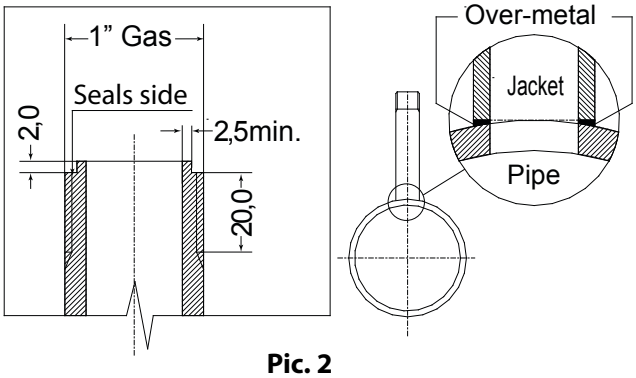

Pic. 2

- **Place gasket into the sensor**
- **Insert the sensor into the Ø 1" nipple**

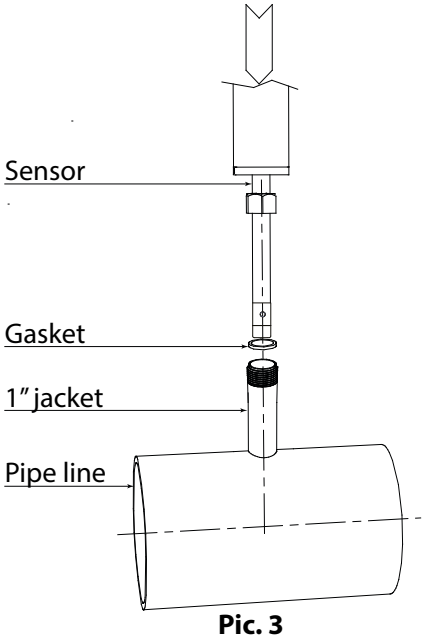

Pic. 3

- **Align longitudinally the connector box with the pipe line axis (pic. 5)**
- **Tighten the nut with a spanner keeping the alignment (pic. 4) . The fixing of the nut must guarantee the sealing of the gasket**

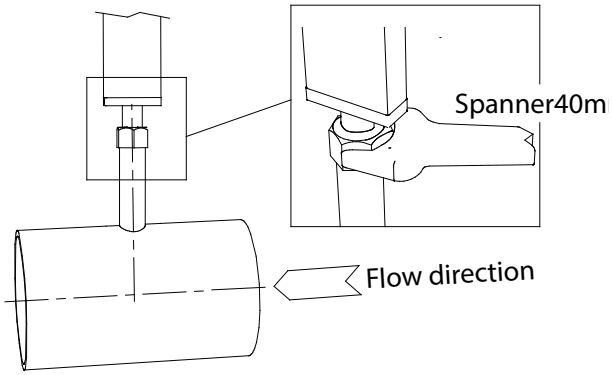

Pic. 4

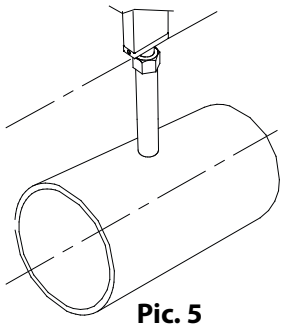

Pic. 5

SIZE	DN RANGE	L
SIZE 1	DN 80 up to DN 500	176
SIZE 2	DN 80 up to DN 1000	244
SIZE 3	DN 80 up to DN 2000	462

Sensor installed

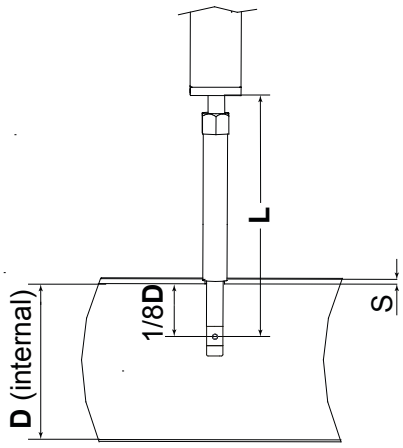

Pic. 6

The manufacturer guarantees only English text available on our web site www.isoil.com

INSTALLATION RECOMMENDATIONS

In vertical installations an ascending flow is preferable. For vertical installations with descending flow direction contact the manufacturer

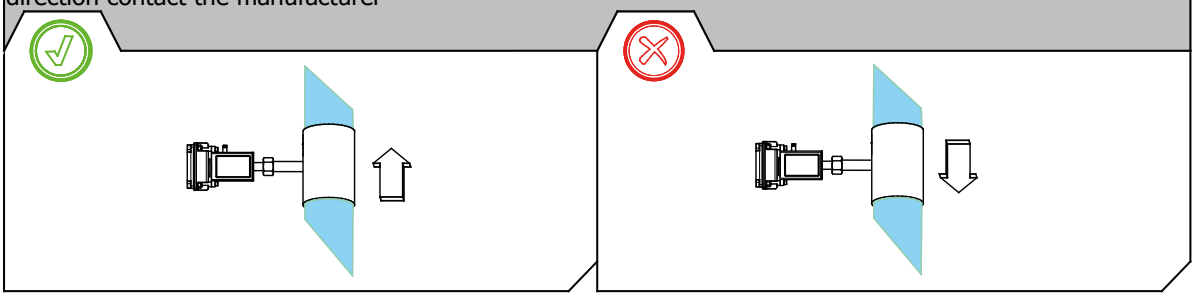

Avoid a partially empty pipe, during operation the pipe must be either completely full of liquid or completely empty

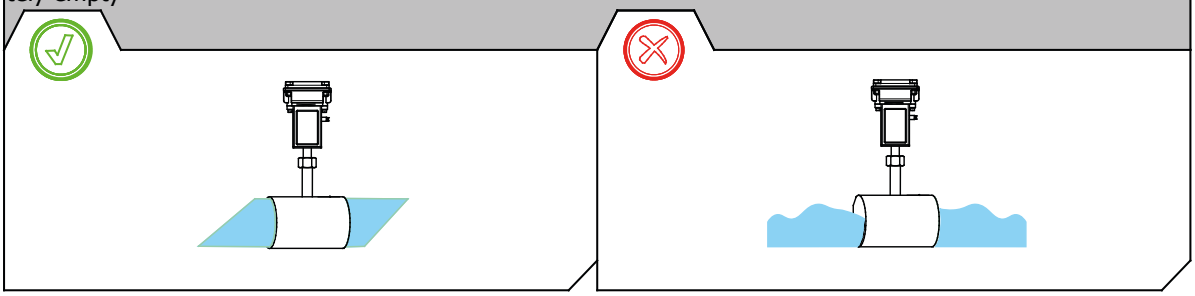

Install the sensor away from bends and hydraulic accessories

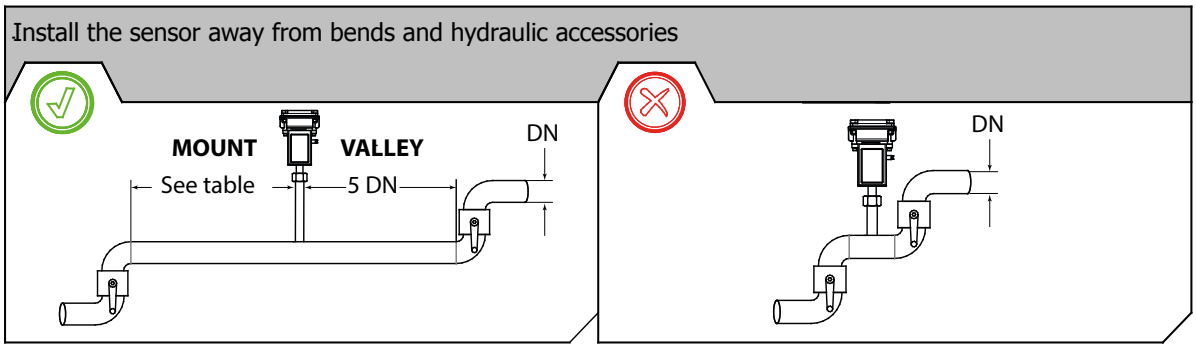

Install the sensor away from bends and hydraulic accessories

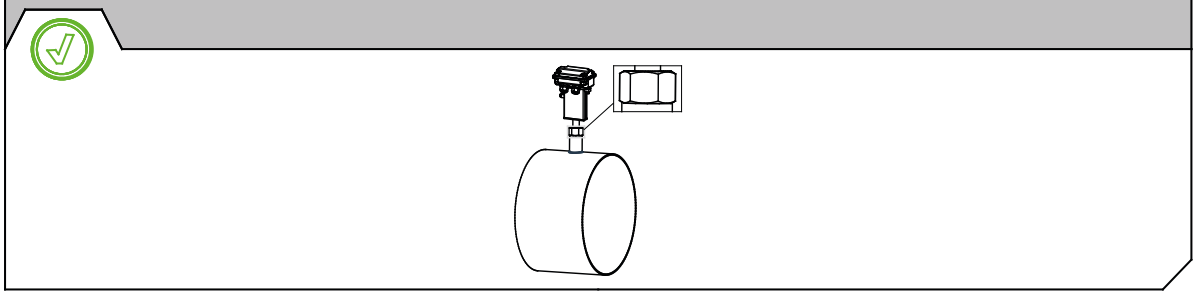

	Min upstream straight length expressed in multiples of pipe diameter. Table according data from UNI10727_1998	
Disturbance upstream from the measuring point	Valid for a measurement at the point of mean axial velocity	Valid for a measurement on the axis of the pipe
90° elbow or a t-bend	50	25
Several 90° coplanar bends	50	25
Several 90° non- coplanar bends	80	50
Total angle convergent 18 to 36°	30	10
Total angle divergent 14 to 28°	55	25
Fully opened butterfly valve	45	25
Fully opened plug valve	30	15

The manufacturer guarantees only English text available on our web site www.isoil.com

SENSOR GROUNDING

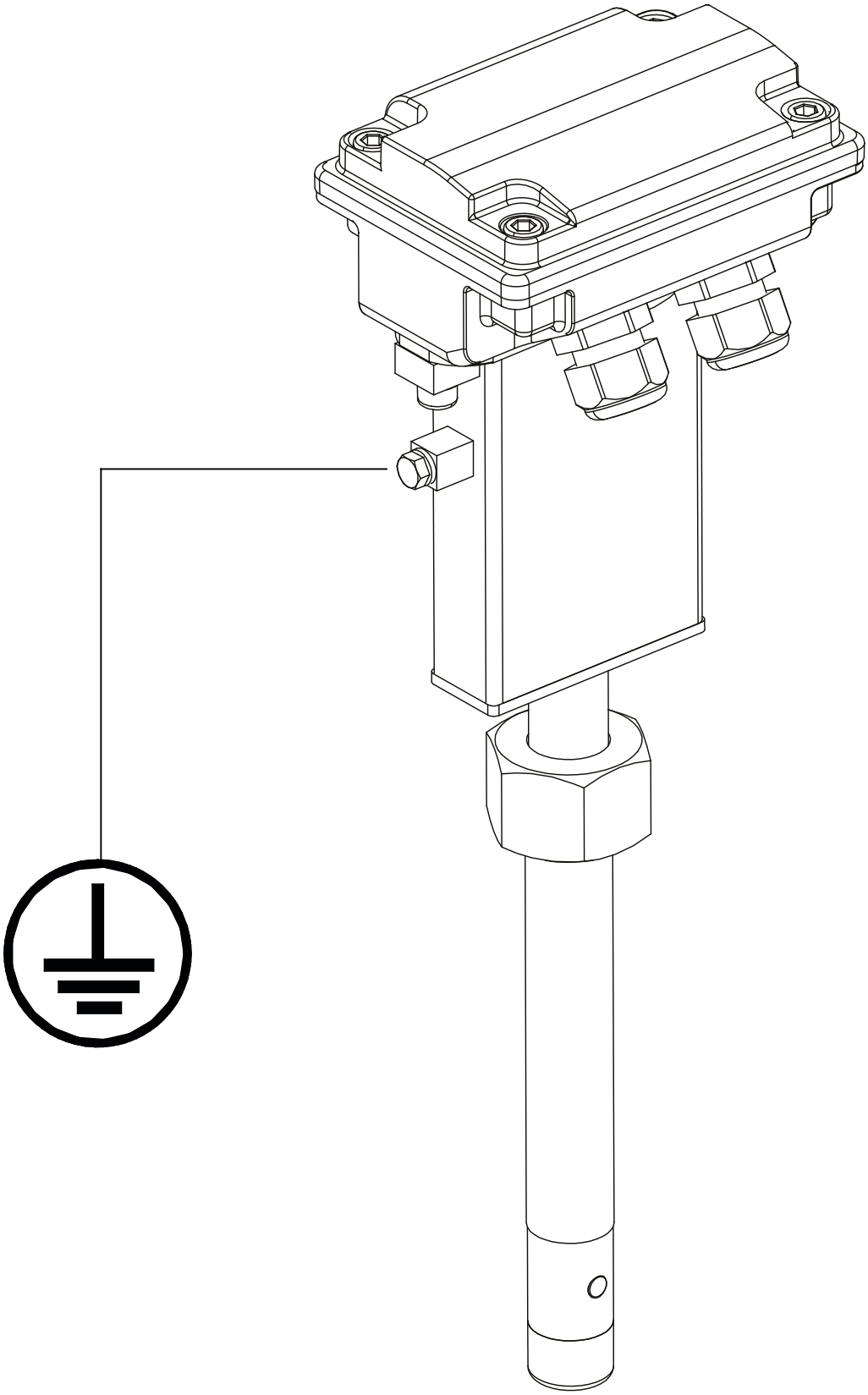

For the correct operation of the meter the sensor and liquid must be equipotential. ALWAYS connect sensor and converter to the ground.

For grounding with a cathodic protection pipe, please contact the manufacturer.

The manufacturer guarantees only English text available on our web site www.isoil.com

SENSOR VERSIONS / JUNCTIONS BOX

	1	2	3	4
A PAINTED ALUMINIUM	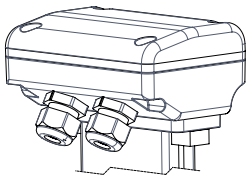	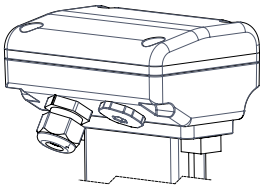	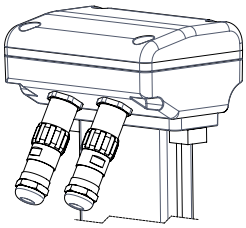	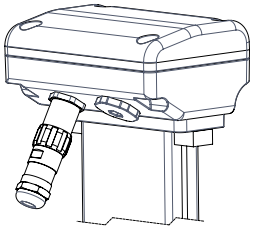
B AISI 304	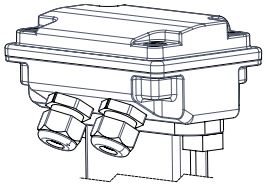	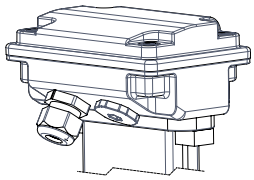	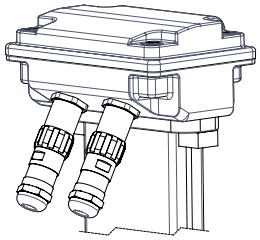	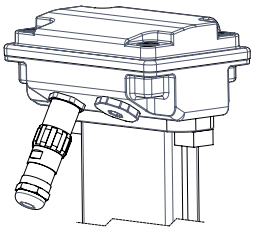

PRICE LIST OPTIONS	JUNCTION BOX TYPE (surface finish)
A	Without junction box, converter connected on the connections box
B	A-1 A-2 only for ML110
G	A-4
F	A-3
N	A-2 with preamplifer
Q	A-4 with preamplifer
U	B-1 (raw) B-2 only for ML110 (raw)
S	B-4 (raw)
T	B-3 (raw)
P	B-2 with preamplifer (raw)
R	B-4 with preamplifer (raw)
K	B-1 (polished) B-2 only for ML110 (polished)
Y	B-4 (polished)
W	B-3 (polished)
V	B-2 with preamplifer (polished)
J	B-4 con preamplificatore (finitura lucidata)

The manufacturer guarantees only English text available on our web site www.isoil.com

SEPARATE VERSION

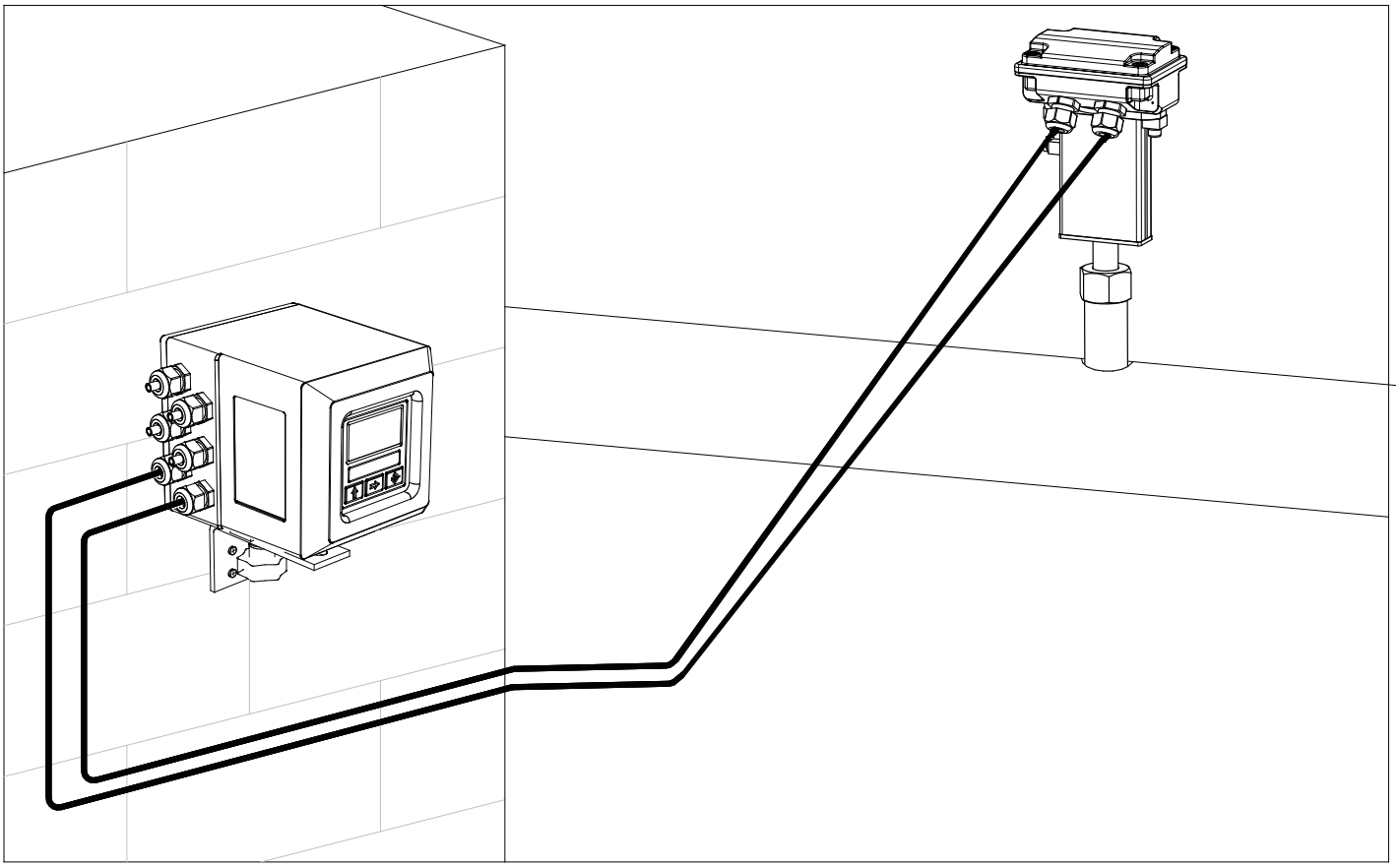

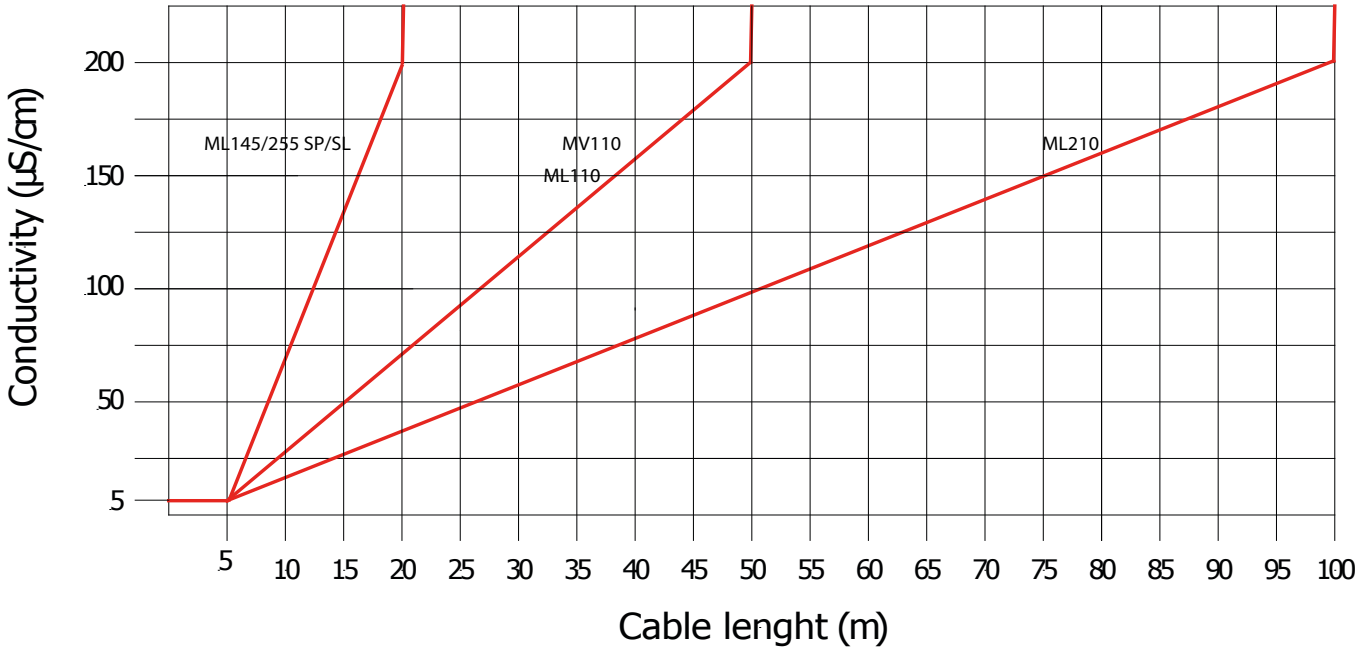

Note:

- It is recommended to install the connection cables away from, or protect against sources of electromagnetic noise.
- The minimum conductivity of the liquid medium to ensure correct functionality of the empty pipe detection is 20 µS/cm

The manufacturer guarantees only English text available on our web site www.isoil.com

ACCURACY TABLE

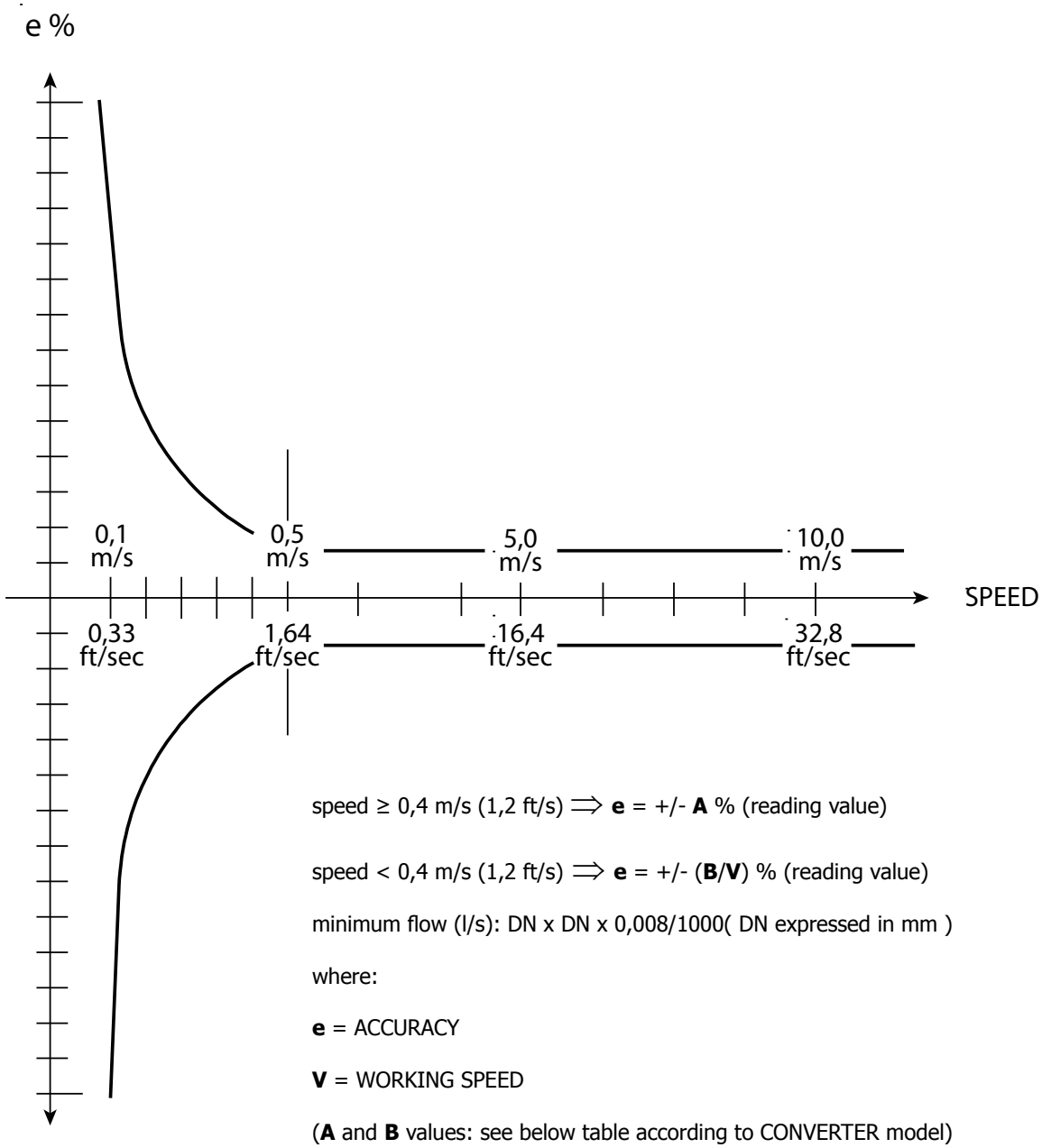

speed ≥ 0,4 m/s (1,2 ft/s) ⇒ **e** = +/- **A** % (reading value)

speed < 0,4 m/s (1,2 ft/s) ⇒ **e** = +/- (**B**/**V**) % (reading value)

minimum flow (l/s): DN x DN x 0,008/1000(DN expressed in mm)

where:

e = ACCURACY

V = WORKING SPEED

(**A** and **B** values: see below table according to CONVERTER model)

A	B (Speed m/s)	B (Speed ft/s)
2	0,8	0,24

Reference conditions:

- Constant flow rate during the test
- Pressure: >30 kPa
- Flow condition : fully developed flow profile
- Zero stability +/- 0,005 %
- ID accuracy: mean value better than 1%, IDmin/IDmax>0,98

The manufacturer guarantees only English text available on our web site www.isoil.com

HOW TO ORDER

MS 3780		
	Suitable for piping diameter	
code **1**	1	Suitable for diameter < / = 500 mm.
	2	Suitable for diameter < / = 1000 mm.
	3	Suitable for diameter < / = 2000 mm.
	9	Suitable for diameter: to be specified
Sensor and electrodes material / lining		
A	A	Sensor material AISI316, Peek lining, electrodes in Hastelloy C276 , gasket in FKM , NEK in SS AISI 304
	Z	Sensor material: to be specified
Connection type		
1	1	1" female threaded connection
	0	Connection: to be specified
Number and electrodes material		
A	A	Compact version , IP67 protection rate
	B	Separate version, Painted Aluminum JB, protection rate IP68, standing immersion with 1,5 m of head water - (DEFINE THE CABLE LENGTH - ADD THE COST)
	G	Separate version, Painted Aluminum JB, N° 1 connectors IP 68 suitable for fast cable connections - (DEFINE THE CABLE LENGTH - ADD THE COST)
	F	Separate version, Painted Aluminum JB, N° 2 connectors IP 68 suitable for fast cable connections - (DEFINE THE CABLE LENGTH - ADD THE COST)
	N	Separate version, Painted Aluminum JB , PREAMPLIFIER*, protection rate IP67 - (DEFINE THE CABLE LENGTH MAX 500 m-ADD THE COST)
	Q	Separate version, Painted Aluminum JB, PREAMPLIFIER*, N° 1 connectors IP 68 suitable for fast cable connection - (DEFINE THE CABLE LENGTH MAX 500 m-ADD THE COST)
	U	Separate version, AISI 304 JB RAW, protection rate IP68, standing immersion with 1,5 m of head water - (DEFINE THE CABLE LENGTH - ADD THE COST)
	S	Separate version, AISI 304 JB RAW, with N° 1 connectors IP 68 suitable for fast cable connections - (DEFINE THE CABLE LENGTH - ADD THE COST)
	T	Separate version, AISI 304 JB RAW, N° 2 connectors IP 68 suitable for fast cable connections - (DEFINE THE CABLE LENGTH - ADD THE COST)
	P	Separate version, AISI 304 JB RAW, PREAMPLIFIER*, protection rate IP67 - (DEFINE THE CABLE LENGTH MAX 500 m-ADD THE COST)
	R	Separate version, AISI 304 JB RAW, PREAMPLIFIER* N° 1 connectors IP 68 suitable for fast cable connections to - (DEFINE THE CABLE LENGTH MAX 500 m-ADD THE COST)
	K	Separate version, AISI 304 JB POLISHED, protection rate IP68, standing immersion with 1,5 m of head water - (DEFINE THE CABLE LENGTH - ADD THE COST)
	Y	Separate version, AISI 304 JB POLISHED, with N° 1 connectors IP 68 suitable for fast cable connections - (DEFINE THE CABLE LENGTH - ADD THE COST)
	W	Separate version, AISI 304 JB POLISHED, N° 2 connectors IP 68 suitable for fast cable connections - (DEFINE THE CABLE LENGTH - ADD THE COST)
	V	Separate version, AISI 304 JB POLISHED, PREAMPLIFIER*, protection rate IP67 - (DEFINE THE CABLE LENGTH MAX 500 m-ADD THE COST)
	J	Separate version, AISI 304 JB POLISHED, PREAMPLIFIER* N° 1 connectors IP 68 suitable for fast cable connections to - (DEFINE THE CABLE LENGTH MAX 500 m-ADD THE COST)

MS3780-1A1A (Example of Complete code for order)

The manufacturer guarantees only English text available on our web site www.isoil.com

The manufacturer guarantees only English text available on our web site www.isoil.com

ISOIL INDUSTRIA S.p.A.

HEAD OFFICE	SERVICE
Via Fratelli Gracchi, 27 20092 Cinisello Balsamo (MI) Tel +39 02 66027.1 Fax +39 02 6123202 vendite@isoil.it	isomagservice@isoil.it

If you want to find the complete list of our distributors access at the following link:
http://www.isoil.com/u_vendita.asp

Due to the constant technical development and improvement of its products, the manufacturer reserves the right to make changes and/or modify the information contained in this document without notice.